Aprilaire®

ELECTRONIC THERMOSTAT

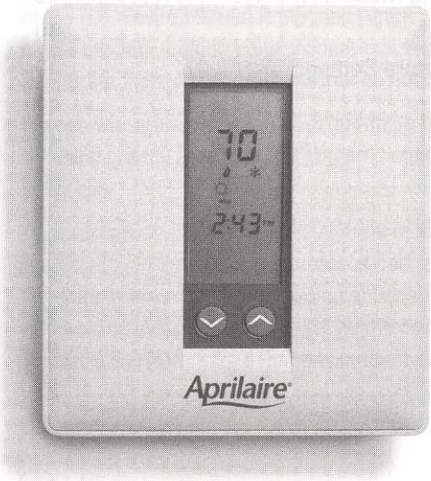

Owner's Manual

MODEL 8552

5-2 Day Programmable Thermostat

Energy
EPA DOE
SAVING THE EARTH. SAVING YOUR MONEY.

OWNER'S MANUAL – TABLE OF CONTENTS

Energy Star® Program Information 1
Setting Or Changing The Clock 3
Setting Or Changing The Weekday Program For Heating Mode 5
Program Schedule 6
Setting Or Changing The Weekend Program For Heating Mode 9
Setting Cooling Temperatures 10
Reviewing Programmed Time Schedules And Temperature Settings 12
To Start Running The Program 12
For Best Performance 13
Thermostat Operation 13
- Temperature Control 15
- Time Control 16
- Equipment Control 17

Optional Settings For Additional Thermostat Features 19
In Case Of Power Failure 25
Cleaning 25
Limited Warranty 26

© Research Products Corporation 2000

Energy Star® Program Information

About half of all energy used by households goes to heating and cooling the home. By selecting a programmable Aprilaire® Electronic Thermostat, you have made a significant step toward conserving energy usage and costs, while improving your indoor comfort.

In fact, the Aprilaire Electronic Thermostat Model 8552 has earned the "Energy Star®" designation of the U.S. Environmental Protection Agency (EPA). This means that your Aprilaire Thermostat is a highly efficient, cutting edge product that is good for the environment. It saves energy and costs less to operate than similar products that do not qualify for the Energy Star label.

Energy Star products help you differentiate between standard efficiency and high efficiency products. By using Energy Star products you are helping to prevent air pollution while saving money on your utility bills.

According to the EPA, taking advantage of the times that a home is unoccupied or the occupants are asleep, an Energy Star thermostat can reduce heating and cooling bills by as much as 30%. The Aprilaire Thermostat has programmable capabilities that allow you full flexibility to set your heating and cooling systems to meet your comfort and energy needs. As an Energy Star partner, Research Products has determined that this product meets the Energy Star guidelines for energy efficiency.

As part of the Energy Star program, your thermostat has been programmed with the following times and temperatures. This has been done to achieve energy efficiency and lower energy bills. If you need to modify your program schedule, see page 6.

EVENT	THERMOSTAT SYMBOL	DESIRED TEMPERATURE SETTING	TIME SCHEDULE						
			Mon	Tue	Wed	Thu	Fri	Sat	Sun
Morning		Heat = 70° Cool = 78°	6:00 am	6:00 am	6:00 am	6:00 am	6:00 am	6:00 am	6:00 am
Day		Heat = 62° Cool = 85°	8:00 am	8:00 am	8:00 am	8:00 am	8:00 am	8:00 am	8:00 am
Evening		Heat = 70° Cool = 78°	5:00 pm	5:00 pm	5:00 pm	5:00 pm	5:00 pm	5:00 pm	5:00 pm
Night		Heat = 62° Cool = 82°	10:00 pm	10:00 pm	10:00 pm	10:00 pm	10:00 pm	10:00 pm	10:00 pm

IMPORTANT: READ ALL INSTRUCTIONS THOROUGHLY

Programming your Aprilaire Thermostat is done in three easy steps: setting the clock, setting the event times, and setting your desired temperatures.

Setting Or Changing The Clock

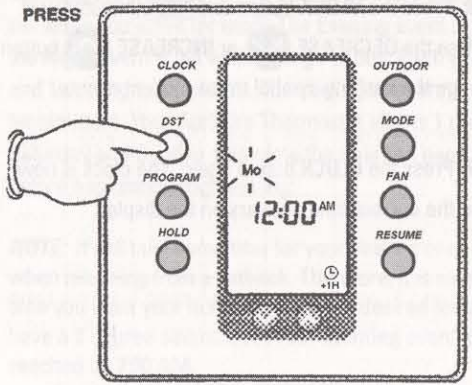

Step 1: If you are currently in Daylight Saving Time (first Sunday in April thru fourth Sunday in October), press the **DST** button and " +1H " will appear in the lower right-hand corner of the display.

Step 2: Press the **CLOCK** button and **"Mo"** (or another day of the week) will flash. Use the **DECREASE** or **INCREASE** button to change the flashing symbol to the current day of week.

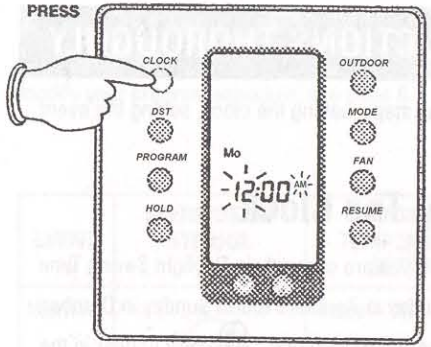

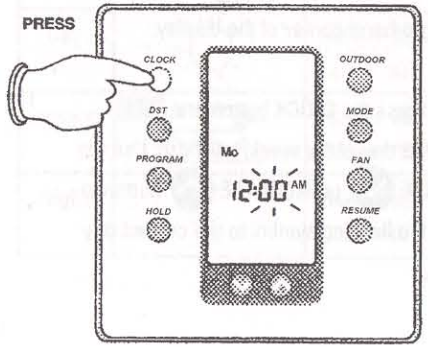

Step 3: Press the **CLOCK** button again and **"12:"** (hours) and **"AM"** or **"PM"** will flash. Use the **DECREASE** or **INCREASE** button to change the flashing symbol to the current hour making sure the hour has the proper **AM** or **PM** designation.

Step 4: Press the **CLOCK** button and **":00"** (minutes) will flash. Use the **DECREASE** or **INCREASE** button to change the flashing symbol to the current minute.

Step 5: Press the **CLOCK** button again. The clock is now set and the current time appears on the display.

Setting Or Changing The Weekday Program For Heating Mode

Programming your Aprilaire Electronic Thermostat involves selecting the temperature you want in your home and selecting the time you want it to be that temperature. Your Aprilaire Thermostat will allow a maximum of 4 time schedules per day. Each time schedule is known as an "event." The **Morning** event is typically when you wake up and is the first event of the day. The **Day** event is typically set when you leave for work. The **Evening** event is typically set when you come home from work and the **Night** event is set when you go to bed. Each event will have 2 temperatures, 1 heating temperature and 1 cooling temperature. The cooling temperature must be at least 2 degrees higher than the heating temperature. Your Aprilaire Thermostat allows 1 program for Monday through Friday and 1 program for Saturday and Sunday. Complete the chart on page 6 with your desired temperatures and time schedules before beginning programming:

NOTE: It will take some time for your heating or cooling system to reach the desired temperature when returning from a setback. Therefore, it is suggested you set your program time before the actual time you want your home to reach the desired temperature. For example, if you get up at 7:00 AM and have a 6 degree setback, set your **Morning** event at 6:00 AM to be sure the desired temperature is reached by 7:00 AM.

PROGRAM SCHEDULE

EVENT	THERMOSTAT SYMBOL	DESIRED TEMPERATURE SETTING	TIME SCHEDULE	
			MONDAY – FRIDAY	SATURDAY & SUNDAY
Morning		Heat = Cool =		
Day		Heat = Cool =		
Evening		Heat = Cool =		
Night		Heat = Cool =		

NOTE: While programming you must press a button at least every 15 seconds or the thermostat will revert back to the operational mode. If this happens, simply repeatedly press the **PROGRAM** button until you get back to where you left off. The information you have already entered has been retained.

NOTE: If consecutive events have the same temperature, you can skip an event by simultaneously pressing the **PROGRAM** and **MODE** buttons. Press and release the **PROGRAM** button to advance to the next event.

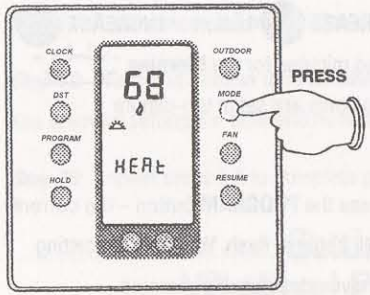

Step 1: Press and release the **MODE** button until the word "**HEAT**" and the "🔥" heating symbol appear on the display.

Step 2: Press and release the **PROGRAM** button – "**Mo Tu We Th Fr**"; **Morning** event symbol "☀"; flashing **"12:"** (or some other hour); and flashing **"AM"** or **"PM"** will appear on the display. You are now setting the time you want your heating or cooling equipment to come on in the morning.

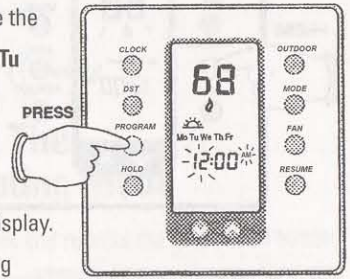

Step 3: Press the **DECREASE** button or **INCREASE** button to set the desired hour for the **Morning** "☀" event.

Step 4: Press and release the **PROGRAM** button – **":00"** (or some other minutes) will flash.

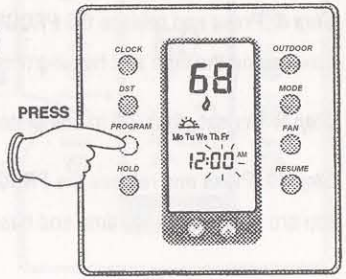

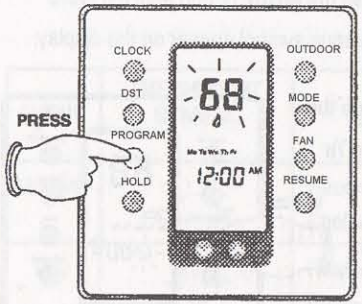

Step 5: Press the **DECREASE** button or **INCREASE** button to set the desired minutes for the **Morning** " " event (program starting times are set in ten-minute increments).

Step 6: Press and release the **PROGRAM** button – the current heating temperature will begin to flash. You are now setting the heating temperature you desire in the morning.

Step 7: Press the **DECREASE** button or **INCREASE** button to set the desired heating temperature for the **Morning** " " event.

Step 8: Press and release the **PROGRAM** button – the **Day** " " event symbol will appear. You are now setting the time and heating temperature you want throughout the day.

Step 9: Repeat steps 2-6 to complete programming for the **Day** " " event.

Step 10: Press and release the **PROGRAM** button – the **Evening** " " event symbol will appear. You are now setting the time and heating temperature you want during the evening.

Step 11: Repeat steps 2-6 to complete programming for the **Evening** " " event.

Step 12: Press and release the **PROGRAM** button – the **Night** " " event symbol will appear. You are now setting the time and heating temperature you want at night.

Step 13: Repeat steps 2-6 to complete programming for the **Night** " " event.

Setting Or Changing The Weekend Program For Heating Mode

Step 1: After setting the **Night** " " event Weekday program, press and release the **PROGRAM** button. "**Sa Su**"; the **Morning** " " event symbol; flashing "**12:**" (or some other hour); and flashing "**AM**" or "**PM**" will appear on the display. You are now programming the time and temperatures for the weekend.

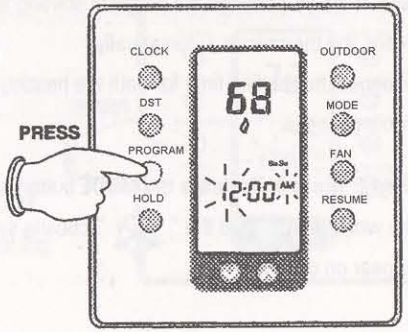

Step 2: Repeat steps 2-6 identical to Weekday programming for **Morning** " ", **Day** " ", **Evening** " ", and **Night** " " events for heating mode as applicable.

Setting Cooling Temperatures

NOTE: Cooling temperatures ***must*** be set at least 2 degrees higher than heating temperatures. (Example: If heating temperature is set at 70°F, cooling temperature must be set to at least 72°F or higher.) If not set at least 2 degrees higher, the thermostat will automatically lower the previously programmed heating temperature to maintain the 2 degree separation.

NOTE: Your event starting times are the same in the cooling mode program as the heating mode start times. Example: If your program start time for the **Morning** " " event is 7:00 AM for heating, the cooling start time is already programmed for 7:00 AM as well. Once you change the program starting time for an event, the thermostat automatically changes the starting time for both the heating and cooling modes.

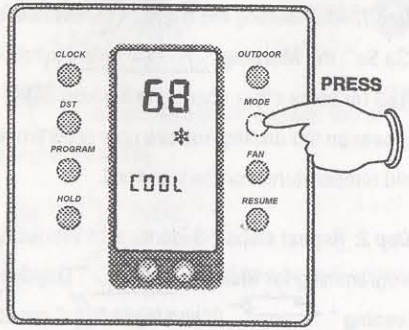

Step 1: Press and release the **MODE** button until the word "**COOL**" and the " " cooling symbol appear on display.

Step 2: Press and release the **PROGRAM** button – "**Mo Tu We Th Fr**"; **Morning** " " event symbol; and flashing starting time you programmed will appear on the display.

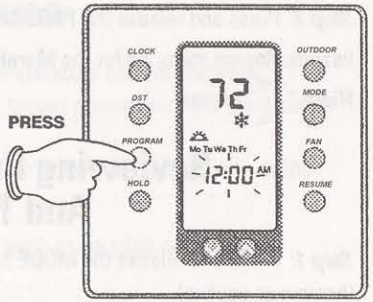

Step 3: Press and release the **PROGRAM** button repeatedly until the temperature flashes.

Step 4: Press the **DECREASE** button or **INCREASE** button to set the desired cooling temperature (for the morning event). You are now setting the cooling temperature you want in the morning.

Step 5: Repeat steps 2-4 for the **Day** " ", **Evening** " ", and **Night** " " events.

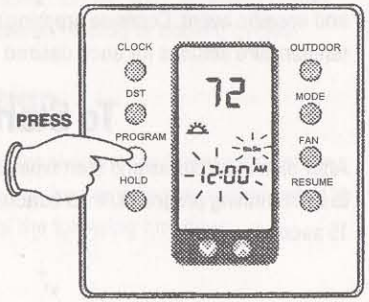

Step 6: After selecting the cooling temperature for the Weekday **Night** " " event, press and release the **PROGRAM** button. "**Sa Su**"; **Morning** " " event symbol; and flashing starting time you programmed will appear on the display.

Step 7: Press and release the **PROGRAM** button until the temperature for the **Morning** "" event flashes. Repeat steps 2-4 for the **Morning** "", **Day** "", **Evening** "", and **Night** "" events.

Reviewing Programmed Time Schedules And Temperature Settings

Step 1: Press and release the **MODE** button repeatedly to advance to the desired mode (heating or cooling).

Step 2: Press and release the **PROGRAM** button repeatedly to advance to "**Mo Tu We Th Fr**", or "**Sa Su**" and specific event. Continue pressing the **PROGRAM** button to review the time schedules and temperature settings for each desired event.

To Start Running The Program

After all temperatures and start times have been programmed, press and release the **RESUME** button to start running programs. If no button is pressed thermostat will resume automatically in approximately 15 seconds.

For Best Performance

The Aprilaire® Model 8552 thermostat is designed for accurate temperature control and easy operation. The following guidelines should be followed to ensure proper operation of the thermostat:

1. When the thermostat is operating, close the cover to allow for proper air circulation over the temperature sensor.
2. Do not place anything which can give off warm or cool air, such as candles or portable humidifiers, near the thermostat.
3. Although the thermostat is internally equipped to prevent short cycling of the furnace and air conditioner, it is possible to inadvertently override this protection. Do not start, stop, and restart the equipment without allowing a minimum of 2 minutes between heating or cooling cycles.

Thermostat Operation

The Model 8552 is a full-featured thermostat which allows for additional control and operations after basic time and temperature programming is completed. In addition to the programming buttons used to set up all event times and temperatures, additional buttons control the following functions:

Aprilaire Model 8552
5-2 Day Programmable Thermostat

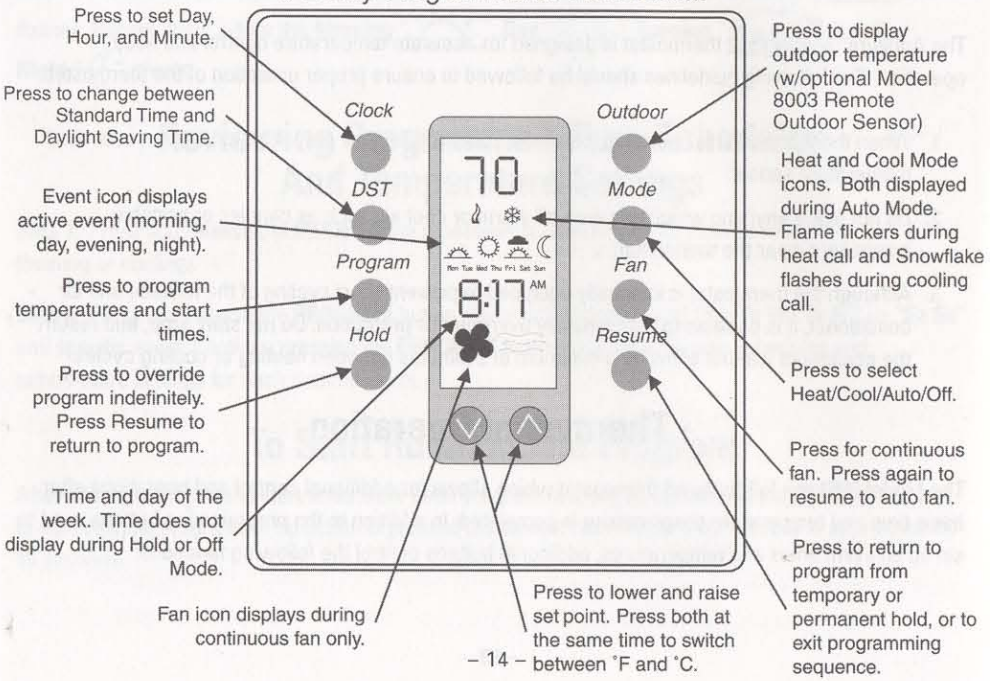

TEMPERATURE CONTROL

- ***Reading the Actual Room Temperature:*** The Model 8552 normally displays the room temperature, not the set-point temperature.
- ***Check the Set-Point Temperature:*** Press and release the **DECREASE** button or **INCREASE** button. The thermostat will display the programmed set-point temperature and a thermometer for 5 seconds before automatically returning to the actual room temperature display.
- ***Temporarily Override the Set Temperature:*** Press and hold the **DECREASE** button or **INCREASE** button to change the room set-point temperature in 1 degree increments. The new set-point temperature will be held for 3 hours, then the thermostat will automatically return to the program.
- ***Hold a New Temperature Set Point:*** Press and hold the **DECREASE** button or **INCREASE** button to change the room set-point temperature in 1 degree steps. The new set-point temperature can be maintained indefinitely by pressing and releasing the **HOLD** button. The word "**HOLD**" will be displayed. The thermostat will maintain this new set-point temperature until the **RESUME** button is pressed returning the thermostat to the original program. This procedure is typically used during extended vacant periods (vacations, business trips, etc.), to hold an economical set point until you return.

- ***Returning to Programmed Operation:*** At any time, press the **RESUME** button to return the thermostat to operate as programmed.
- ***Change Between °C and °F:*** The thermostat has the capability of displaying either Celsius or Fahrenheit temperatures. If the displayed temperature seems abnormally high or low (ie: 70°F = 21°C) you may need to switch to °C or °F by simultaneously pressing the **DECREASE** button and the **INCREASE** button.
- ***Checking the Outdoor Temperature:*** If your thermostat was installed with the optional Aprilaire Outdoor Temperature Sensor, simply press the **OUTDOOR** button and the thermostat will display the outdoor temperature for 3 seconds before automatically returning to the actual room temperature display.

TIME CONTROL

- ***Change From 12- to 24-Hour Clock:*** Press and release the **CLOCK** button, then press the **MODE** button. To return to a standard clock, repeat the process.

EQUIPMENT CONTROL

- ***Turning on the Fan:*** At any time the system fan can run continuously by pressing the **FAN** button. Note that a **Fan** icon, "", appears in the lower part of the display indicating that the fan is continuously operating. To return the fan to the normal operating mode, press the **FAN** button again which will remove the icon from the display. In the normal operating mode the fan will only run when the heating or air conditioning is operating. Continuous fan operation is beneficial if your system is equipped with a high efficiency air cleaner or a humidifier, or to circulate air in the home when neither heating nor air conditioning is needed. For some heat-only systems, continuous fan operation may not be an option.
- ***Selecting Cooling Mode:*** Press the **MODE** button until the word "**COOL**" appears on the display. In this mode the air conditioning system will maintain temperature according to the programming previously completed unless an override temperature has been entered. Note that a **Snowflake** icon, "", is on the display, which flashes when the air conditioning is running.
- ***Selecting Heating Mode:*** Press the **MODE** button until the word "**HEAT**" appears on the display. In this mode the heating system will maintain temperature according to the programming previously

completed unless an override temperature has been entered. Note that a **Flame** icon, "🔥" is on the display, which flickers when the furnace is running.

- ***Automatic Heating and Cooling:*** This mode can be useful during times of the year and in climates when it is cool at night requiring heating but warm in the afternoon requiring cooling. Press and release the **MODE** button until the word "**AUTO**" appears on the display. In this mode the cooling and heating system will maintain temperature according to the programming previously completed unless an override temperature has been entered. The heating and cooling systems will not operate at the same time. Either will turn on depending on which programmed set point is closest to the room temperature. Note that both the **Snowflake**, "❄", and **Flame**, "🔥", icons are on the display. The **Snowflake** will flash or the **Flame** will flicker depending on which equipment is running.
- ***Turning the System Off:*** Press the **MODE** button until the word "**OFF**" appears on the display. In this mode neither heating or air conditioning will operate regardless of the temperature. The thermostat can still be programmed, the optional outdoor temperature sensor will work and the furnace fan will turn on if the **FAN** button is pressed. To avoid frozen water pipes, **DO NOT** use the **OFF** mode for long periods of time during sub-freezing temperatures.

NOTE: After selecting a new mode, the thermostat initiates a delay of up to 4 minutes to protect the heating and cooling equipment.

Optional Settings For Additional Thermostat Features

The Model 8552 thermostat is equipped with 3 **DIP** switches located inside the thermostat on the printed circuit board. These switches are preset by the factory to typical home heating and air conditioning system requirements. The installing contractor also reviewed the settings during installation to be sure the thermostat will operate properly with your heating and air conditioning system.

The **DIP** switches can however be changed to customize the thermostat's operation to your particular needs. This should only be done after consulting with your contractor.

The Model 8552 **DIP** switches control the following functions:

No. 1 – 4 min./2 min. Minimum Equipment On/Off Times. This switch is factory preset at 2 minutes. This switch provides short cycle protection for the furnace and air conditioning unit. If you feel that the furnace or air conditioning system turns on and off too many times per hour, ask your contractor about changing the switch to a 4 minute minimum on time. Keep in mind however that this may increase the overall temperature variation in the house due to longer run and off times. **DO NOT** change the position of this switch without first consulting with your contractor.

No. 2 – Keypad Lock. If tampering with the thermostat is expected and unwanted, the keypad can be locked by moving this switch from the factory set **OFF** position to **ON**. This should not be done until all programming is finalized. In the locked position only the following functions can be done:

- The outdoor temperature button will display the outdoor temperature.
- The **DECREASE** button or **INCREASE** button will temporarily change the set point a maximum of plus or minus 3 degrees for a period of 1 hour, before the thermostat automatically returns to the original program.

If the thermostat does not respond when a button is pushed it may be because the keypad has been locked. A **Lock** icon " " will appear when a button other than **OUTDOOR** is pushed if the keypad has been locked.

No. 3 – Fan with Heat Call. This switch was set by the installing contractor to operate the thermostat properly with your equipment. **DO NOT** change the position of this switch without consulting with the installing contractor.

To change the DIP switch settings, the thermostat must be removed from the base which is attached to the wall. **The power to the thermostat must be turned off before disassembling or the thermostat can be permanently damaged. If you do not know where the switch is that controls the power to your thermostat, do not attempt to access the DIP switches.** The following procedure must be carefully followed:

a) Turn off power to the thermostat.

b) Completely open the thermostat cover. The cover will snap into this position.

c) Carefully insert a medium-sized flathead screwdriver into the latch access slot *(see Figure 1).*

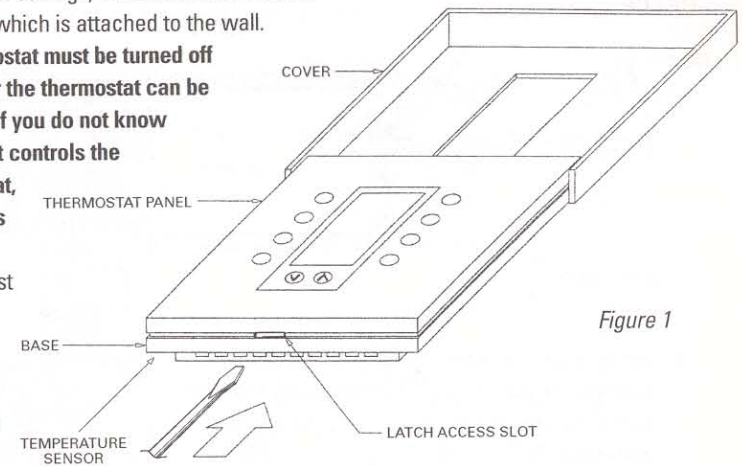

Figure 1

CAUTION: **TO PREVENT DAMAGE, AVOID CONTACT WITH BLUE TEMPERATURE SENSOR ON BOTTOM RIGHT-HAND CORNER OF THERMOSTAT CIRCUIT BOARD.**

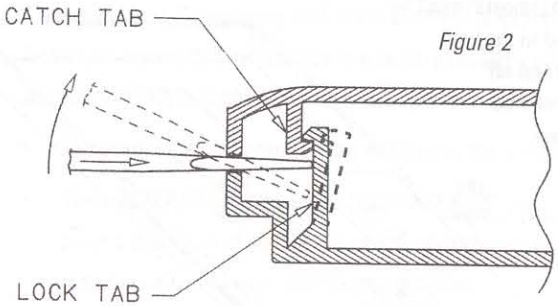

Figure 2

Figure 3

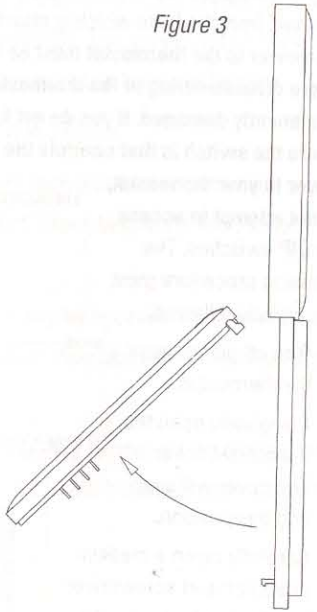

d) Gently push in and pry up on the handle of the screwdriver until the lock tab disengages from the catch tab *(you should feel or hear a click – see Figure 2).*

e) After the latch releases, grip the thermostat panel at the bottom corners and swing it up and away from the base to completely separate *(See Figure 3).*

Once the thermostat panel has been opened and removed from the base, turn the thermostat over and locate the DIP switches found on the circuit board according to the following drawing:

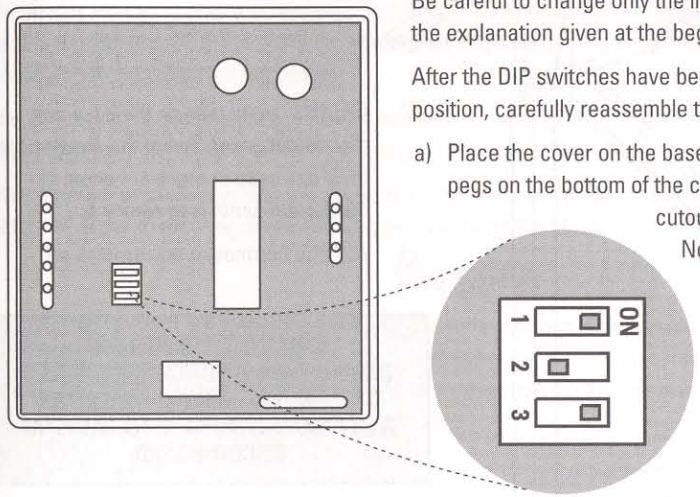

Be careful to change only the intended DIP switches per the explanation given at the beginning of this section.

After the DIP switches have been set to the desired position, carefully reassemble the thermostat.

a) Place the cover on the base by lining up the 2 round pegs on the bottom of the cover with the half circle cutouts on the top of the base. Note that the bottom of the cover when fully open slides in behind the top of the base. Swing the cover fully open. The cover will stay in place.

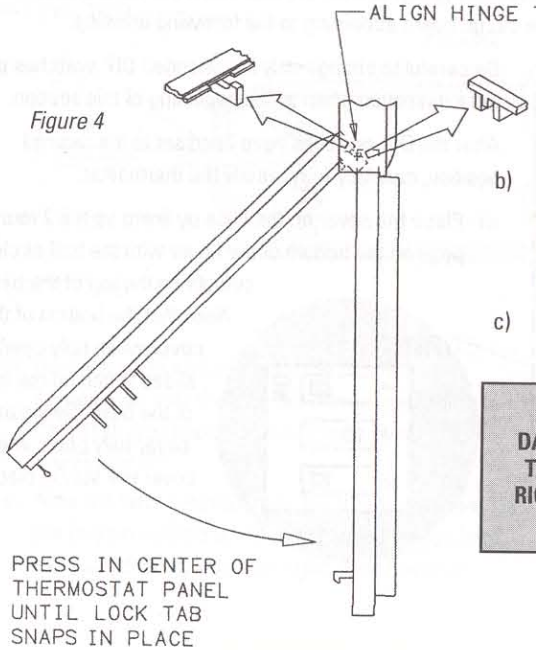

Figure 4

b) Align the hinge tabs on the base and thermostat panel. Swing the panel to the base and snap in place at bottom of thermostat panel *(see Figure 4).*

c) Turn the thermostat power back on.

CAUTION: **TO PREVENT DAMAGE, AVOID CONTACT WITH BLUE TEMPERATURE SENSOR ON BOTTOM RIGHT-HAND CORNER OF THERMOSTAT CIRCUIT BOARD.**

In Case Of Power Failure

The Model 8552 thermostat does not require a battery. If the power goes out the letters "**AC**" appear on the display indicating power is not being supplied to the thermostat. "**AC**" will remain on the display for up to approximately 30 minutes after the power goes out. During the period that the power is off, the heating/cooling system will not operate.

This thermostat is equipped with a continuous memory feature which does not require any battery. The thermostat will never lose what has been programmed regardless of the length of the power outage.

After a period of 30 minutes without power the clock will need to be reset. The clock will default to 12:00 AM. Refer to the Programming Instructions to reset the clock.

Cleaning

If the surface of the thermostat becomes dirty it can be cleaned with plain water or many non-abrasive household cleaners, such as glass cleaner. When using any cleaner be careful not to get any into the interior of the thermostat. Do not spray any cleaner directly onto the thermostat. Spray the cleaner onto a soft cloth and wipe the surface of the thermostat.

Limited Warranty

Your Research Products Corporation Aprilaire® Thermostat unit is expressly warranted for two (2) years from date of installation to be free from defects in materials and workmanship.

Research Products Corporation's exclusive obligation under this warranty shall be to supply, without charge, a replacement for any thermostat which is found to be defective within a two (2) year period and which is returned, together with the date of installation, no later than thirty (30) days after said two (2) year period by you to either your original supplier or to Research Products Corporation, Madison, Wisconsin 53701.

THIS WARRANTY SHALL NOT OBLIGATE RESEARCH PRODUCTS CORPORATION FOR ANY LABOR COSTS AND SHALL NOT APPLY TO DEFECTS IN WORKMANSHIP OR MATERIALS FURNISHED BY YOUR INSTALLER AS CONTRASTED TO DEFECTS IN THE THERMOSTAT ITSELF.

IMPLIED WARRANTIES OF MERCHANTABILITY OR FITNESS FOR A PARTICULAR PURPOSE SHALL BE LIMITED IN DURATION TO THE AFORESAID TWO YEAR PERIOD. RESEARCH PRODUCTS CORPORATION'S LIABILITY FOR INCIDENTAL OR CONSEQUENTIAL DAMAGES, OTHER THAN DAMAGES FOR PERSONAL INJURIES, RESULTING FROM ANY BREACH OF THE AFORESAID IMPLIED WARRANTIES OR THE ABOVE LIMITED WARRANTY IS EXPRESSLY EXCLUDED. THIS LIMITED WARRANTY IS VOID IF DEFECT(S) RESULT FROM FAILURE TO HAVE THIS THERMOSTAT INSTALLED BY A QUALIFIED HEATING AND AIR CONDITIONING CONTRACTOR. IF THE LIMITED WARRANTY IS VOID DUE TO FAILURE TO USE A QUALIFIED CONTRACTOR, ALL DISCLAIMERS OF IMPLIED WARRANTIES SHALL BE EFFECTIVE UPON INSTALLATION.

Some states do not allow limitations on how long an implied warranty lasts or the exclusion or limitation of incidental or consequential damages, so the above exclusion or limitations may not apply to you.

This warranty gives you specific legal rights and you may also have other rights which vary from state to state.

Aprilaire®

TOTAL INDOOR AIR COMFORT SYSTEM

The *Aprilaire® Total Indoor Air Comfort System* is an integrated group of air quality enhancement products designed to work with your heating and cooling system to make your home more comfortable. For the best in indoor air quality, ask your heating and cooling contractor about these fine Aprilaire products, or visit us at **www.aprilaire.com** for your *Indoor Air Solutions*.

Automatic Humidifier

The Best Cure For Dryness®

The world's first computer-equipped, completely automatic humidifier.

High Efficiency Air Cleaner

Nobody Makes Clean Air Easier®

The economical, trouble-free, high efficiency air cleaner for your home.

Fresh Air Exchanger

Only The Freshest Homes Have April Air™

Your best value for a constant, controlled supply of fresh air with energy-recovery.

Zone Control System

Custom Comfort Throughout Your Home®

The most reliable way to achieve temperature control in every area of your home.

Electronic Thermostat

Energy Efficiency Never Looked So Good™

Ultra-thin, easy-to-use programmable or digital controls featuring pinpoint accuracy.

IRP® RESEARCH PRODUCTS CORPORATION

P.O. BOX 1467 • MADISON, WI 53701-1467

Products For Better Indoor Air Quality™

B2202106 REV. 11/99

110-948